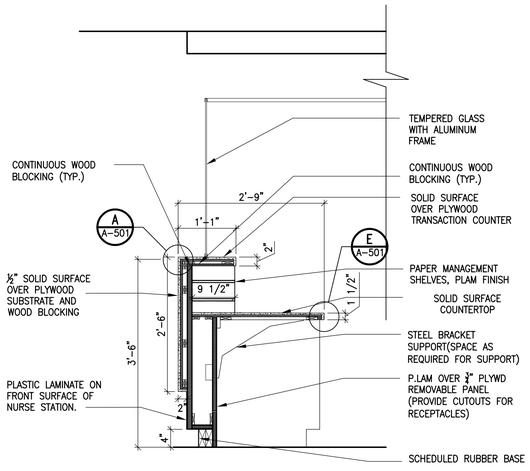

1 SECTION DETAIL @ RECEPTION
SCALE: 3/4" = 1'-0"

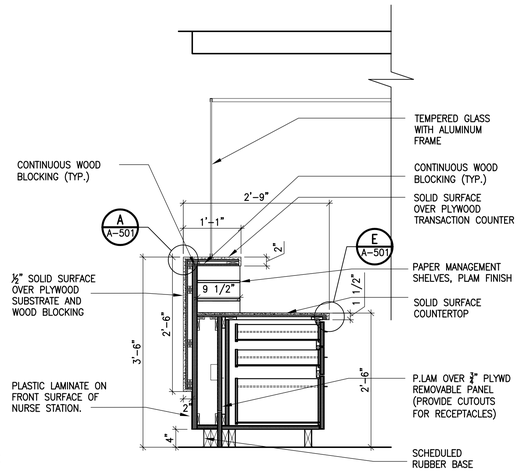

2 SECTION DETAIL @ RECEPTION
SCALE: 3/4" = 1'-0"

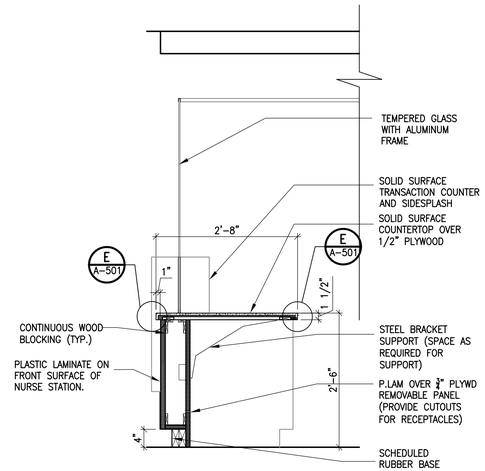

3 SECTION DETAIL @ RECEPTION
SCALE: 3/4" = 1'-0"

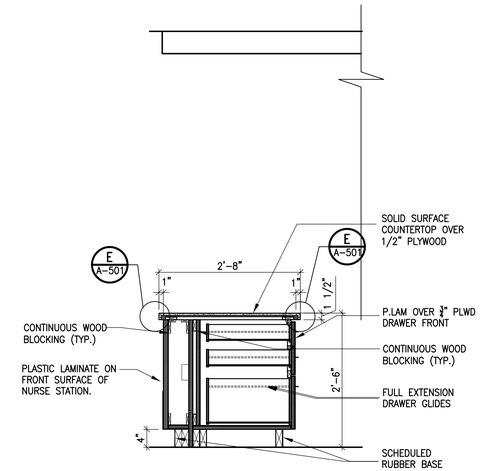

4 SECTION DETAIL @ RECEPTION
SCALE: 3/4" = 1'-0"

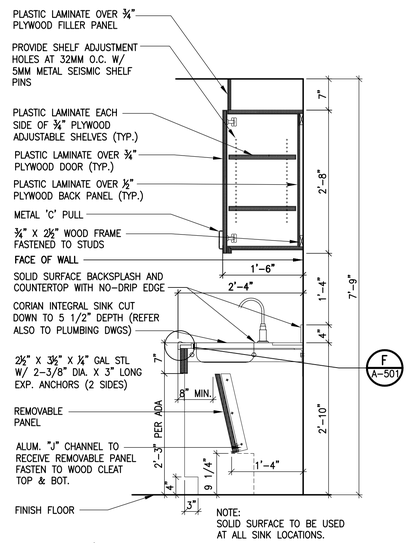

5 SECTION/DETAIL AT SINK IN CLEAN ROOM
SCALE:

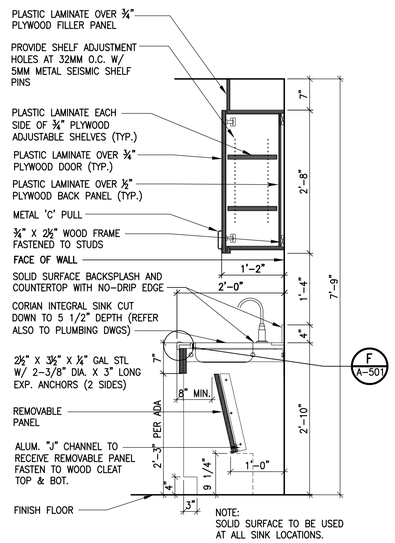

6 SECTION DETAIL @ HAND SINK
SCALE: 3/4" = 1'-0"

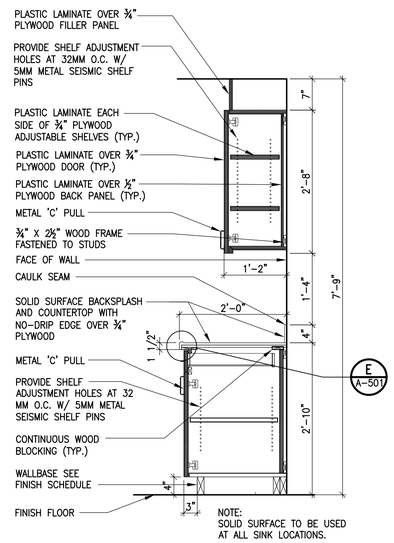

7 SECTION DETAIL @ TOP & BOTTOM CABINETS
SCALE: 3/4" = 1'-0"

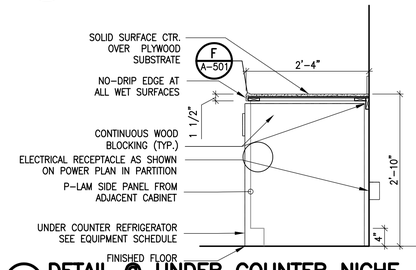

8 DETAIL @ UNDER COUNTER NICHE
SCALE: 3/4" = 1'-0"

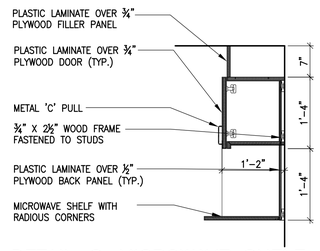

9 DETAIL @ MICROWAVE SHELF
SCALE: 3/4" = 1'-0"

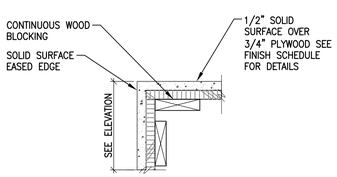

COUNTERTOP EDGE DETAIL A
SCALE: 3"-1'-0"

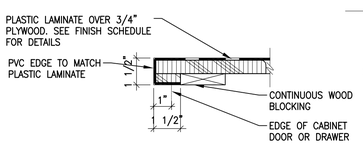

COUNTERTOP EDGE DETAIL B
SCALE: 3"-1'-0"

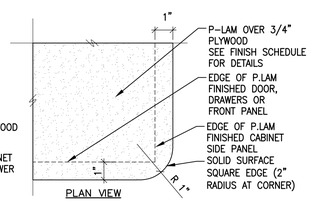

COUNTERTOP EDGE DETAIL C
SCALE: 3"-1'-0"

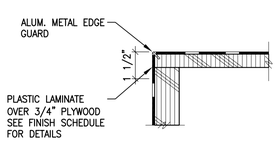

METAL EDGE DETAIL D
SCALE: 3"-1'-0"

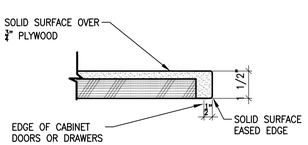

EASED EDGE DETAIL E
SCALE: 3"-1'-0"

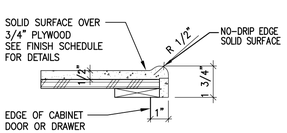

COUNTERTOP EDGE DETAIL F
SCALE: 3"-1'-0"

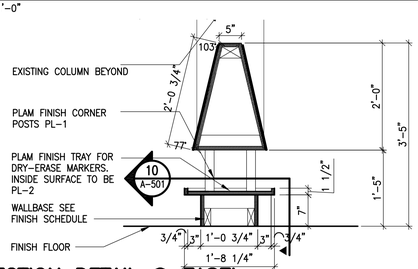

9 SECTION DETAIL @ EASEL
SCALE: 3/4" = 1'-0"

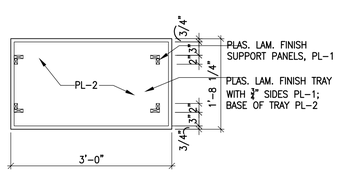

10 PLAN SECTION DETAIL @ EASEL SHELF
SCALE: 3/4" = 1'-0"

MILLWORK NOTES:

1. SUBSTRATE
   FURNITURE GRADE PLYWOOD (7 PLY FOR 3/4" THK, 5 PLY FOR 1/2" THK) USE WATER RESISTANT PLYWOOD FOR COUNTERTOPS WITH SINKS
2. PLASTIC LAMINATE
   1/16" THK, HIGH PRESSURE LAMINATED PLASTIC SHEETS

2A. FIBER REINFORCED LAMINATE
   SEE SECTION DETAILS AND ELEVATIONS FOR LOCATIONS

3. ADHESIVES
   WATERPROOF AS RECOMMENDED BY THE MANUFACTURER OF PLASTIC LAMINATE
4. PROVIDE 1/16" LAMINATE ON ALL SURFACES EXPOSED TO VIEW. ON BACKS NOT EXPOSED TO VIEW, PROVIDE 0.020" LAMINATE BACKING SHEETS TO BALANCE FACE CONSTRUCTION
5. REFER TO FINISH SCHEDULE FOR ADDITIONAL INFORMATION.
6. CONTRACTOR TO VERIFY ALL EXISTING CONDITIONS PRIOR TO FABRICATION.
7. CONTRACTOR TO PROVIDE BLOCKING AS REQ'D FOR SUPPORT.
8. FOR COUNTERTOPS, PROVIDE GROMMETS FOR CABLE/ CONDUIT AS REQ'D. COORDINATE LOCATIONS WITH OWNER.
9. ALL VERTICAL EXPOSED CORNERS AT NURSE STATION AND RECEPTION TO RECEIVE METAL EDGE DETAIL D.

Stantec

Stantec Consulting Services Inc.
100 Motor Parkway, Suite 420
Hauppauge, N.Y. 11788-4008
Tel. 631.424.8600
www.stantec.com

Copyright Reserved

The Contractor shall verify and be responsible for all dimensions. DO NOT scale the drawing - any errors or omissions shall be reported to Stantec without delay.
The Copyrights to all designs and drawings are the property of Stantec. Reproduction or use for any purpose other than that authorized by Stantec is forbidden.

Consultants

BOHLER
2929 Expressway Drive North
Hauppauge, NY 11749
Phone: (631) 738-1200
Fax: (631) 285-6464
www.BohlerEngineering.com

Exceeding Your Expectations
Lizardos
Mechanical & Electrical Engineering
200 Old Country Road, Suite 670
Mineola, NY 11501
Phone: (516) 484-1020
Fax: (516) 484-0926
www.leapc.com

Key Plan

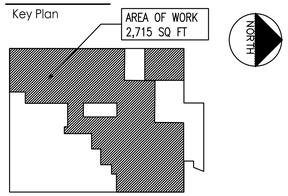

Notes

Revision	By	Appd.	YY.MM.DD
DOB FILING	GM	BD	23.10.16
OMEGA ENVIRONMENTAL SERVICES	GM	BD	23.05.01
OMH FILING	GM	BD	22.12.09

Issued	By	Appd.	YY.MM.DD
File Name: 000048_A-501 - Millwork Sections And Details.dwg	Dwn.	Chkd.	Dsgn. YY.MM.DD

Permit-Seal

Client/Project
RICHMOND UNIVERSITY MEDICAL CENTER TRANSFORMATION GRANT

669 CASTLETON AVE, STATEN ISLAND, NY
SECOND FLOOR PROPOSED RENOVATION

Title
MILLWORK DETAILS

Project No. 225300004
Scale AS NOTED

Drawing No. A-501.00
Sheet 19 of 22
Revision

U:\225300004\architecture\design\drawings\669\000048_A-501 - Millwork Sections And Details.dwg
2024/04/29 7:54 AM By: Hossain, Sanjib
ORIGINAL SHEET - ARCH D