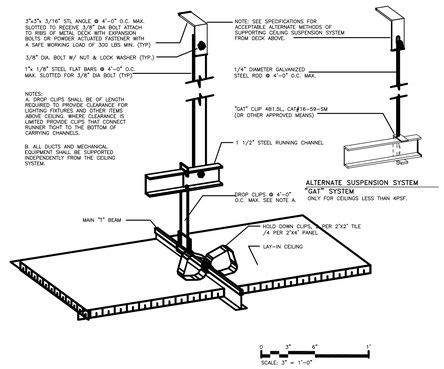

1 ACOUSTIC LAY-IN CLG. DETAIL BLACK IRON

SCALE: SEE GRAPHIC SCALE

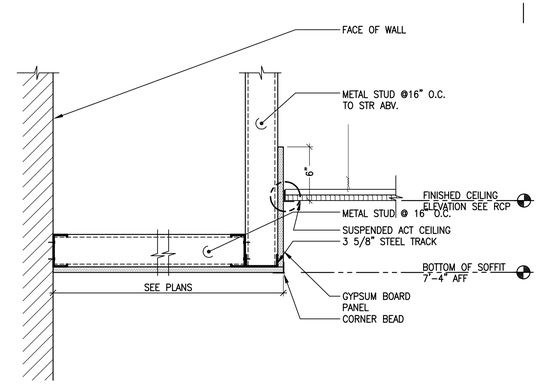

3 DROPPED GYP.BD. CEILING

SCALE: 1-1/2"=1'-0"

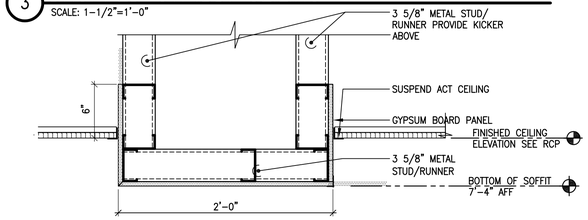

4 RECEPTION SOFFIT DETAIL

SCALE: 1-1/2"=1'-0"

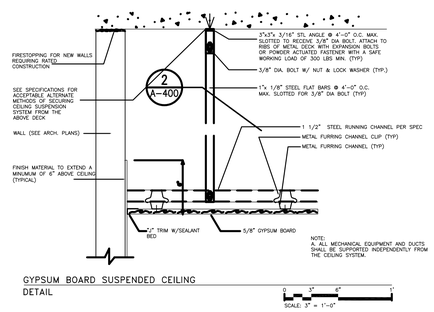

2 GYP. BOARD SUSPENDED CLG. DETAIL BLACK IRON

SCALE: SEE GRAPHIC SCALE

Stantec

Stantec Consulting Services Inc.
100 Motor Parkway, Suite 420
Hauppauge, N.Y. 11788-4008
Tel. 631.424.8600
www.stantec.com

Copyright Reserved

The Contractor shall verify and be responsible for all dimensions. DO NOT scale the drawing - any errors or omissions shall be reported to Stantec without delay.
The Copyrights to all designs and drawings are the property of Stantec. Reproduction or use for any purpose other than that authorized by Stantec is forbidden.

Consultants

BOHLER
2929 Expressway Drive North
Hauppauge, NY 11749
Phone: (631) 738-1200
Fax: (631) 285-6464
www.BohlerEngineering.com

Exceeding Your Expectations
Lizardos
Mechanical & Electrical Engineering
200 Old Country Road, Suite 670
Mineola, NY 11501
Phone: (516) 484-1020
Fax: (516) 484-0926
www.leapc.com

Key Plan

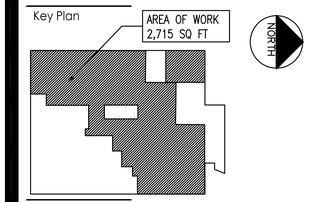

Notes

Revision	By	Appd.	YY.MM.DD
DOB FILING	GM	BD	23.10.16
OMEGA ENVIRONMENTAL SERVICES	GM	BD	23.05.01
OMH FILING	GM	BD	22.12.09

Issued	By	Appd.	YY.MM.DD
File Name: 000048_A-400 - Ceiling Details.dwg			
	Dwn.	Chkd.	Dsgn. YY.MM.DD

Permit-Seal

Client/Project

RICHMOND UNIVERSITY MEDICAL CENTER TRANSFORMATION GRANT

669 CASTLETON AVE, STATEN ISLAND, NY
SECOND FLOOR PROPOSED RENOVATION

Title

CEILING DETAILS

Project No. 225300004

Scale AS NOTED

Drawing No. A-400

Sheet 17 of 22

Revision

U:\225300004\architecture\design\drawing\669\000048_A-400 - Ceiling Details.dwg
2024/04/27 7:52 AM By: Nicole.Greig

ORIGINAL SHEET - ARCH D